Freddie Gray's Neckbreaking Ride: Slideshow Of Interior Details Similar To Baltimore Detainee Transport Vans. Actual Pictures Thus Far Withheld From Media

Author : michaelbloomer

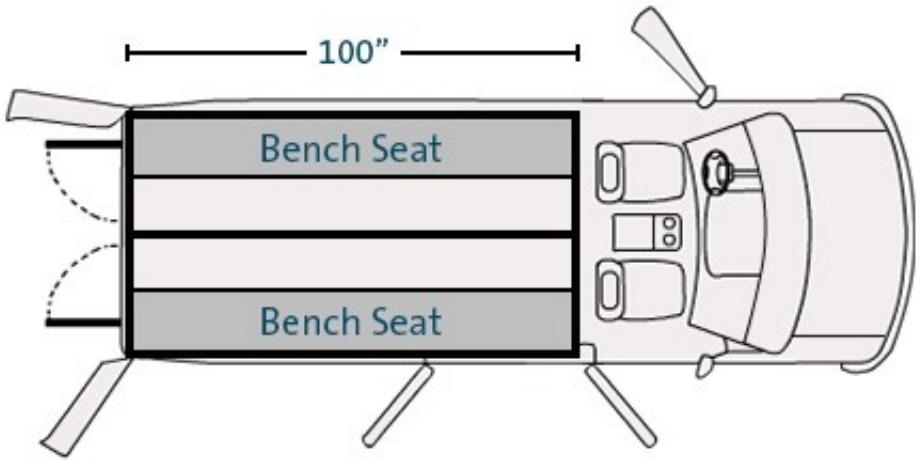

Michael JF Matheron, April 30, 2015.

Television reporters assert that Baltimore police authorities have refused to provide pictures of the interior of their detainee transport vans, infamously known as "paddy wagons." I took the challenge to find some interior shots more close-in than previously published. Google and Bing came back empty when I asked for "Baltimore prisoner transport van interior," and other more general search terms. I did find pictures of Baltimore transport van taken during previous arrests.

Interesting too, I discovered that the Baltimore Police had decided in late 2014 to shift away from vans and to rely more upon squad cars for detainee transport:

> Citing efficiency and safety, the Baltimore Police Department is making yet another visible change in its patrol division by eventually decreasing the use of prisoner transport vans.

During the change in policy, the department assured,

> "In our new vehicles [vans] we have made a number of changes and upgrades regarding

> equipment and tools that will assist our officers in the crime fight. One of those changes will be partitions in the vehicles. These partitions will assist in ensuring the safety of those involved in the arrest, as well in expediting the event itself. They will still allow for complete mobility within the vehicle," Lt. Eric Kowalczyk said. [See complete report and WMAR video of November 21, 2014.]

It jumps out at us, that emphasis on safety for the detainee and the police during the transport. Evidently, in Baltimore, having seat belts as a safety measure and actually using them to buckle-in Mr. Gray are different issues. Police indicate Mr. Gray was not buckled-in, despite Baltimore police rules that require seat belting. Here's a screen shot from Dave Collins' (WMAR) excellent report (URL above):

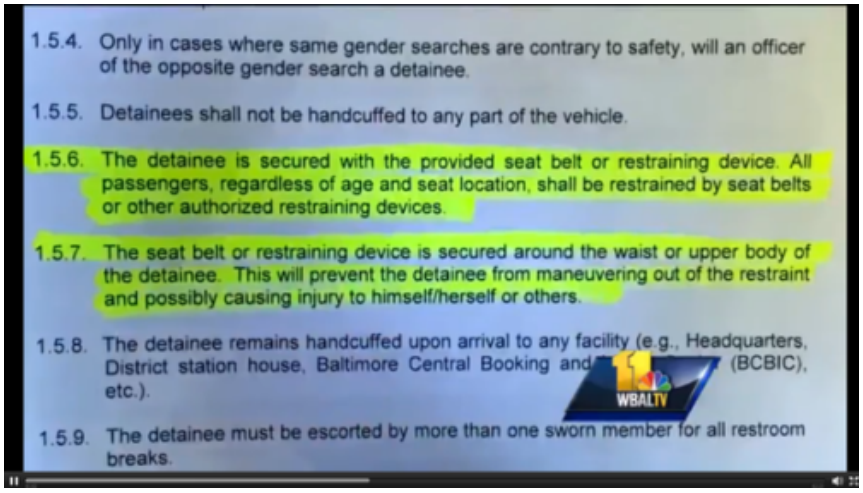

Here are some police van pics and specification diagrams that closely approximate Baltimore's transport vans. To stop any image, just hover your cursor over it. To see a larger version of any image (except the pic of van video and audio), just left-click on it and the image will open in a separate tab.

So, what next Baltimore?[slideshow_deploy id='10208'] A related *They Will Say ANYTHING!* posting here: Baltimore Police 'Press Conference' Takes No Questions. Deputy Commissioner's Summary Ignores The Most Important Issue: Why Was Mr. Gray NOT Delivered First To A Hospital?

I'd really appreciate it if you'd share this post using the share buttons below! Thanks.